Nantucket SINKS

Vitreous China Undermount & Vessel Bath Sinks

Great Point & Brant Point Collections

V01.19

Nantucket
SINKS

There are many choices out there when it comes to bathroom vanity sinks and we hope to be the solution you need. Our undermount assortment of ceramic sinks provide choices for a wide range of bathroom configurations including our featured 13" x 10" undermount with its space saving properties! The next generation are slipping into home ownership by adopting the 'tiny house' philosophy.

Of course, if you've got the space to spread out, grab one of our 19" x 11" and create a beautiful double vanity or opt for a stand-out vessel style sink. All Nantucket models are durable vitreous china, finished in a porcelain enamel glaze to stand up to daily use in the bathroom, including gels, soaps and toothpastes! Whatever your living accommodations, Nantucket has a sink to get the job done in style.

VITREOUS CHINA UNDERMOUNT

All Dimensions are Nominal +/- .25″

UM-16X11-W

UM-16X11-B

DIMENSIONS

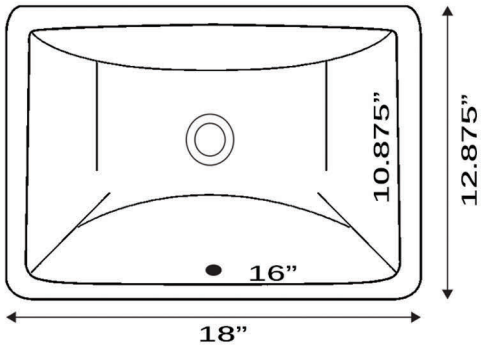

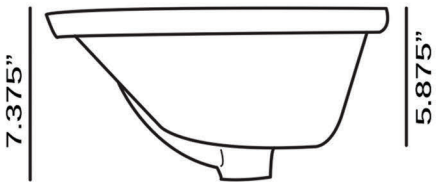

Drain Hole Diameter 1.75″
Standard Vanity Drain Required
With Overflow

UNDER MOUNT | 21 MINIMUM SINK BASE | MATERIAL LIFE RE-CYCLE | OVERFLOW

UM-18X13-W

DIMENSIONS

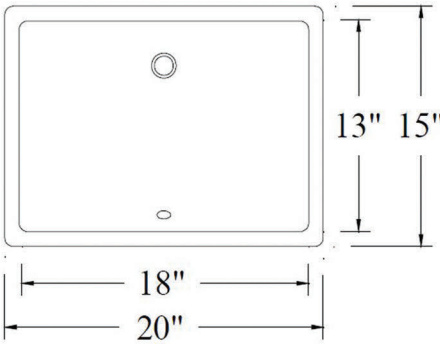

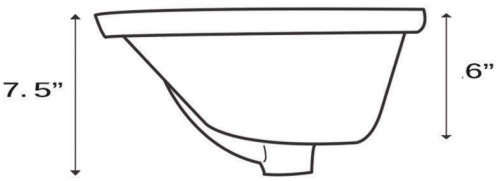

Drain Hole Diameter 1.75″
Standard Vanity Drain Required
With Overflow

UNDER MOUNT | 21 MINIMUM SINK BASE | MATERIAL LIFE RE-CYCLE | OVERFLOW

Nantucket SINKS

VITREOUS CHINA UNDERMOUNT

All Dimensions are Nominal +/- .25"

UM-18X12-W

UM-18X12-B

DIMENSIONS

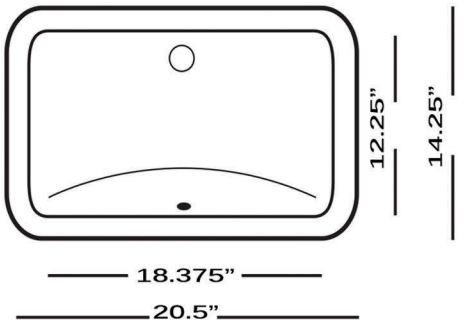

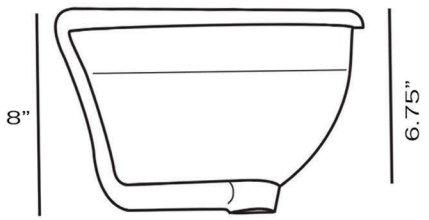

Drain Hole Diameter 1.75"
Standard Vanity Drain Required
With Overflow

OVERFLOW | 24 MINIMUM SINK BASE | MATERIAL LIFE RE-CYCLE | UNDER MOUNT

UM-19X11-W

UM-19X11-B

DIMENSIONS

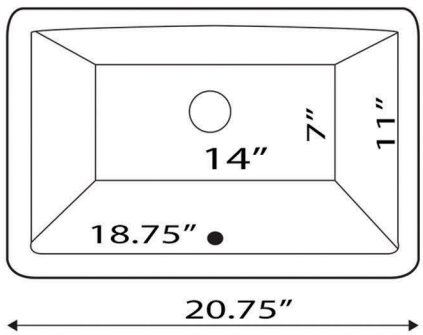

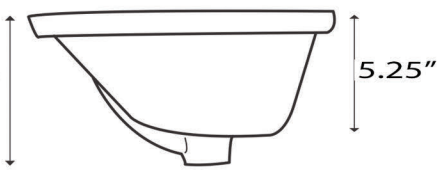

Drain Hole Diameter 1.75"
Standard Vanity Drain Required
With Overflow

Nantucket SINKS

OVERFLOW | 24 MINIMUM SINK BASE | MATERIAL LIFE RE-CYCLE | UNDER MOUNT

VITREOUS CHINA UNDERMOUNT

All Dimensions are Nominal +/- .25"

UM-2112-W

DIMENSIONS

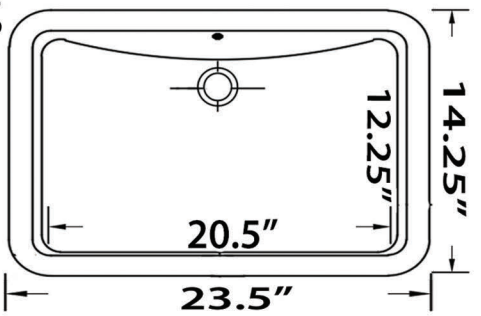

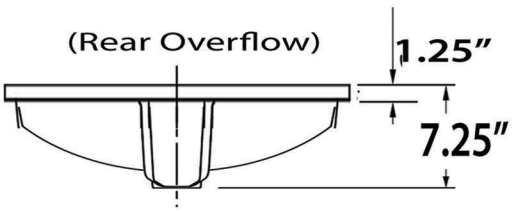

Drain Hole Diameter 1.75"
Standard Vanity Drain Required
With Overflow

UM-15X12-W UM-15X12-B

DIMENSIONS

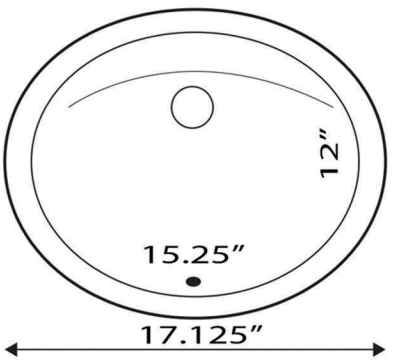

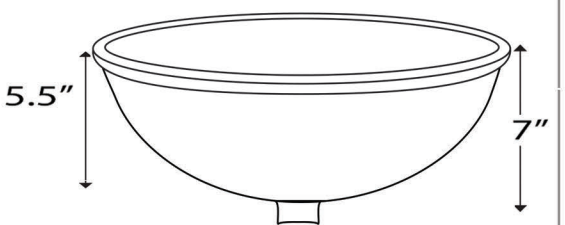

Drain Hole Diameter 1.75"
Standard Vanity Drain Required
With Overflow

Nantucket SINKS

VITREOUS CHINA UNDERMOUNT

All Dimensions are Nominal +/- .25"

UM-17X14-W-K UM-17X14-B-K

DIMENSIONS

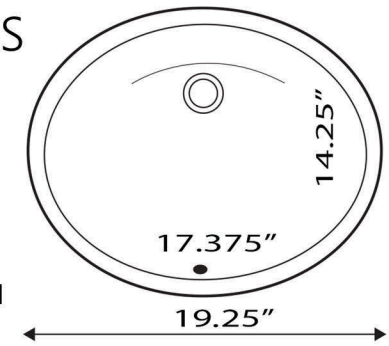

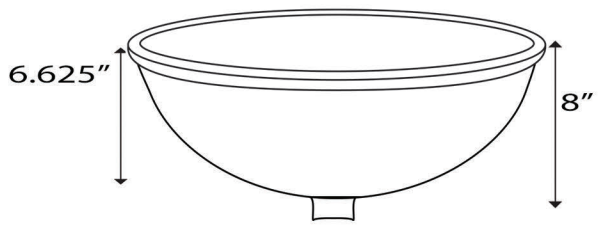

Drain Hole Diameter 1.75"
Standard Vanity Drain Required
With Overflow

OVERFLOW 21 MINIMUM SINK BASE MATERIAL LIFE RECYCLE UNDER MOUNT

UM-13X10-W UM-13X10-B

DIMENSIONS

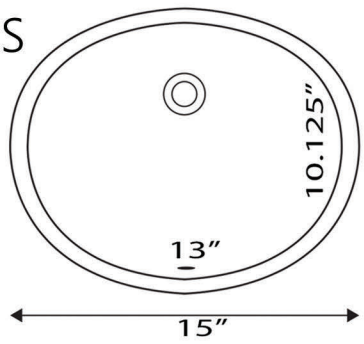

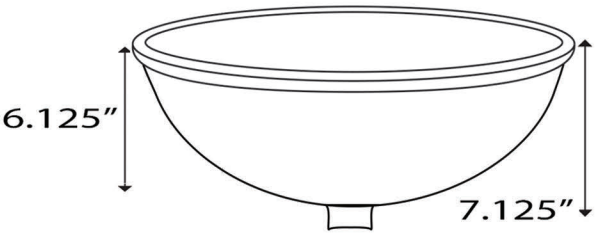

Drain Hole Diameter 1.75"
Standard Vanity Drain Required
With Overflow

Nantucket SINKS

UNDER MOUNT 18 MINIMUM SINK BASE MATERIAL LIFE RECYCLE OVERFLOW

VITREOUS CHINA UNDERMOUNT

All Dimensions are Nominal +/- .25"

GB-18X12-W

GLAZED BOTTOM

DIMENSIONS

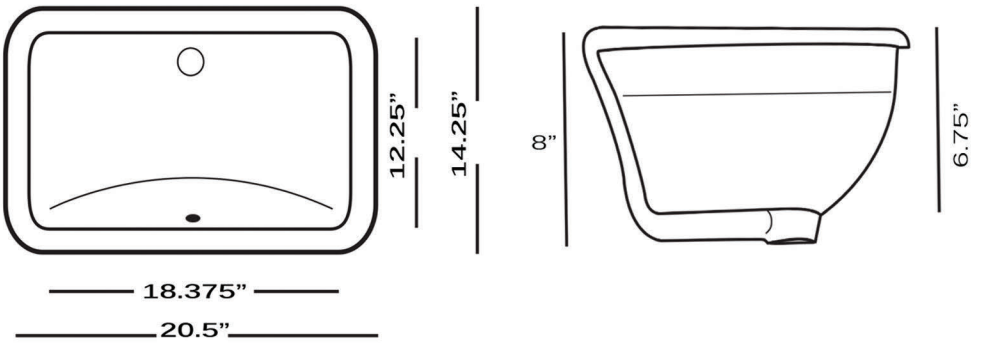

Drain Hole Diameter 1.75"
Standard Vanity Drain Required
With Overflow

UNDER MOUNT | 24 MINIMUM SINK BASE | MATERIAL LIFE RE-CYCLE | OVERFLOW

GB-15X12-W

GLAZED BOTTOM

DIMENSIONS

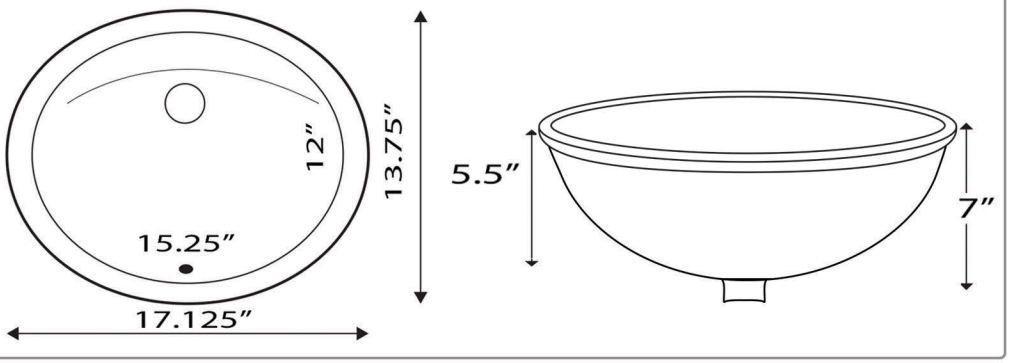

Drain Hole Diameter 1.75"
Standard Vanity Drain Required
With Overflow

UNDER MOUNT | 21 MINIMUM SINK BASE | MATERIAL LIFE RE-CYCLE | OVERFLOW

Nantucket SINKS

VITREOUS CHINA UNDERMOUNT

All Dimensions are Nominal +/- .25"

GB-17X14-W

GLAZED BOTTOM

DIMENSIONS

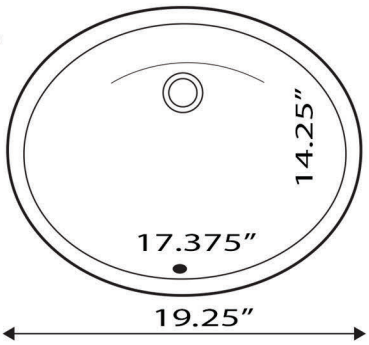

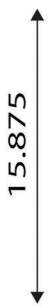

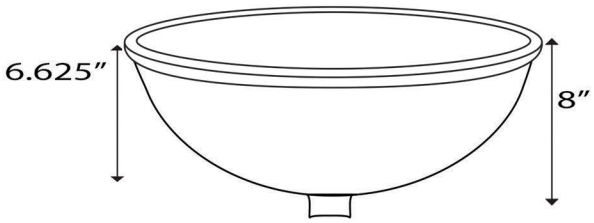

Drain Hole Diameter 1.75"
Standard Vanity Drain Required
With Overflow

GB-17X13-W

GLAZED BOTTOM

DIMENSIONS

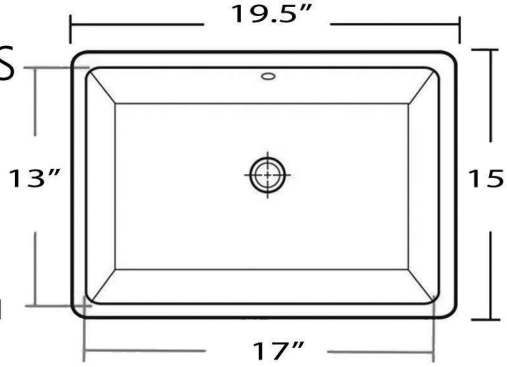

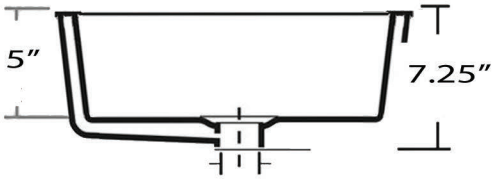

Drain Hole Diameter 1.75"
Standard Vanity Drain Required
With Overflow

Nantucket SINKS

VITREOUS CHINA TOPMOUNT

All Dimensions are Nominal +/- .25"

DI-2418-R8

DIMENSIONS

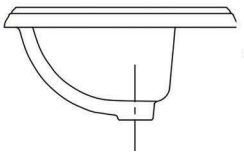

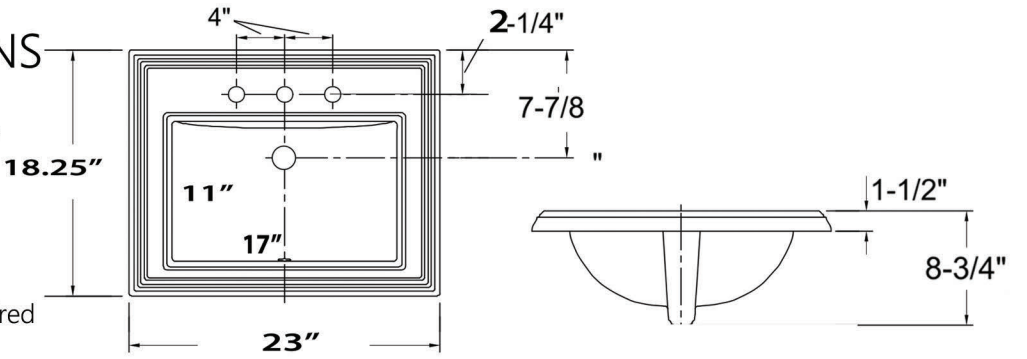

Drain Hole Diameter 1.75"
Standard Vanity Drain Required
With Overflow

UNDER MOUNT | 27 MINNIMUM SINK BASE | MATERIAL LIFE RE-CYCLE | OVERFLOW

DI-2114-R

DIMENSIONS

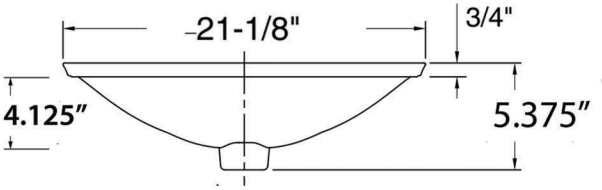

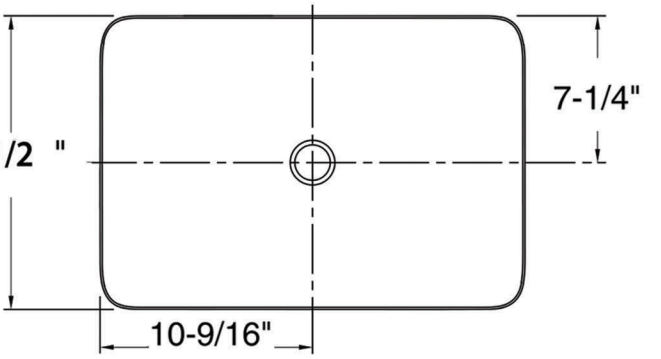

Drain Hole Diameter 1.75"
Standard Vanity Drain Required
No Overflow

UNDER MOUNT | 24 MINIMUM SINK BASE | MATERIAL LIFE RE-CYCLE | NO OVERFLOW

Nantucket SINKS

VITREOUS CHINA TOPMOUNT

All Dimensions are Nominal +/- .25"

DI-2317-R1

DIMENSIONS

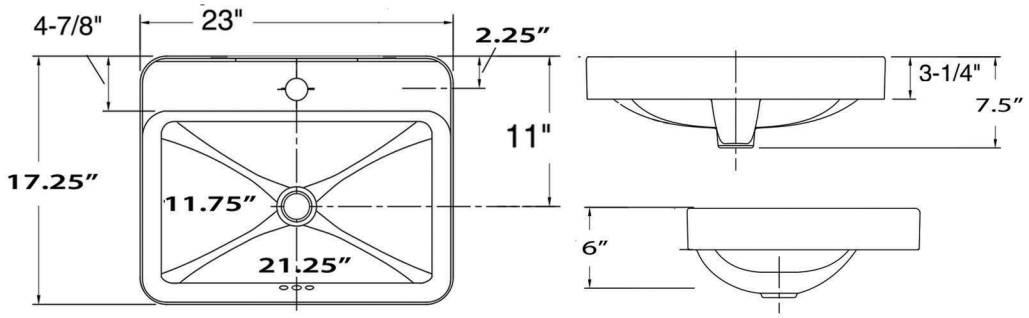

Drain Hole Diameter 1.75"
Standard Vanity Drain Required
With Overflow

OVERFLOW · 27 MINIMUM SINK BASE · MATERIAL LIFE RE-CYCLE · TOP MOUNT

DI-2317-R8

DIMENSIONS

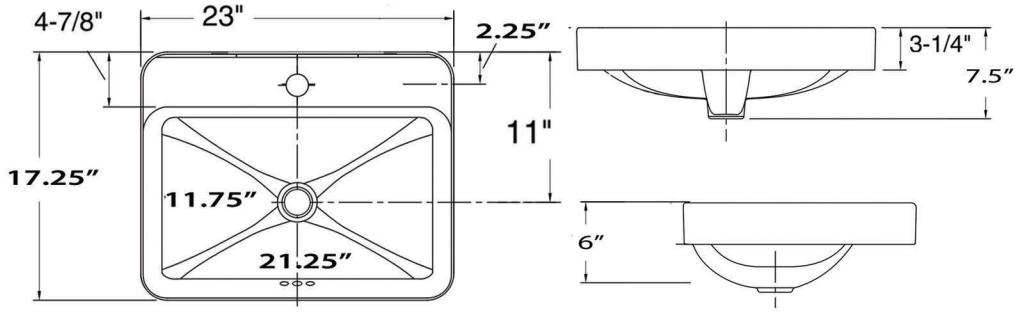

Drain Hole Diameter 1.75"
Standard Vanity Drain Required
With Overflow

OVERFLOW · 27 MINIMUM SINK BASE · MATERIAL LIFE RE-CYCLE · TOP MOUNT

Nantucket SINKS

Nantucket SINKS

Sink either is with overflow or without overflow.

Verify the the installation process defined fits the needs of your bathroom project.

Verify that you have the minimum sink base recommended for installation.

Non-porous surface inhibits bacterial growth.

Porcelain enamel glazed surface resists staining.

Naturally sound absorbing.

Uses all natural materials and can return to the earth at end of sink's usage.

Mounting hardware supplied for most models.

Templates supplied for most models.

Easy to clean surface.

BRANT POINT COLLECTION

VITREOUS CHINA VESSEL

All Dimensions are Nominal +/- .25"

NSV105

DIMENSIONS

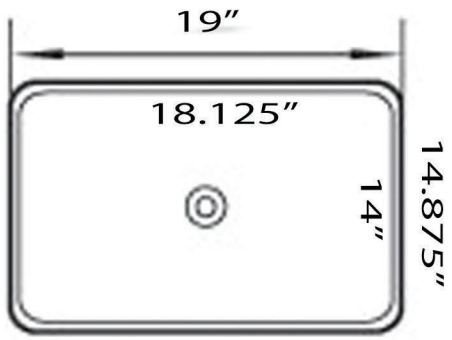

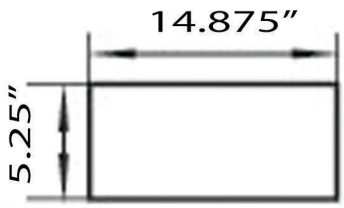

Drain Hole Diameter 1.75"
Standard Vanity Drain Required
No Overflow

NSV107A

DIMENSIONS

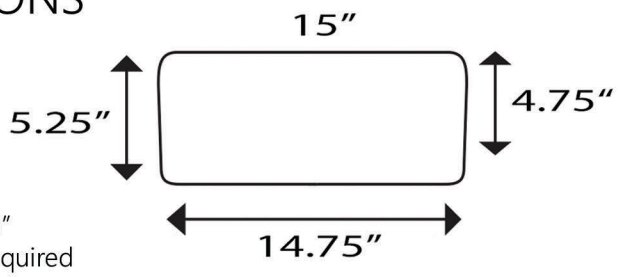

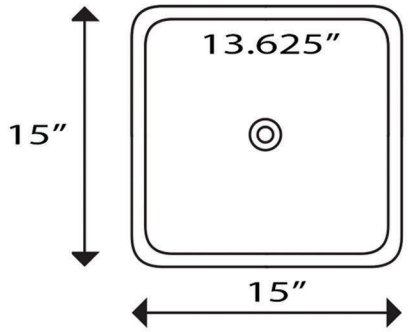

Drain Hole Diameter 1.75"
Standard Vanity Drain Required
No Overflow

Nantucket SINKS

VITREOUS CHINA VESSEL

All Dimensions are Nominal +/- .25"

NSV213

DIMENSIONS

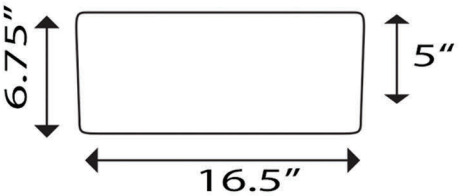

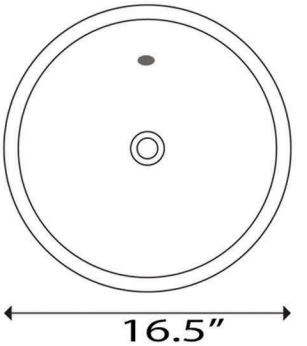

Drain Hole Diameter 1.75"
Standard Vanity Drain Required
With Overflow

TOP MOUNT | MATERIAL LIFE RECYCLE | 18 MINIMUM SINK BASE | OVERFLOW

NSV218

Approximate 6.0" diameter cut out required to accommodate drain and overflow extension. Please use actual sink as template.

DIMENSIONS

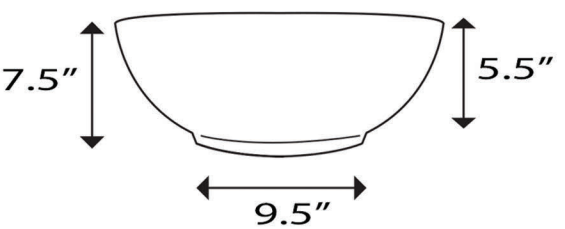

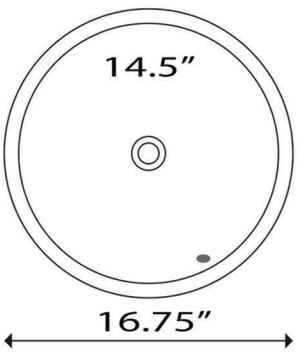

Drain Hole Diameter 1.75"
Standard Vanity Drain Required
With Overflow

TOP MOUNT | MATERIAL LIFE RECYCLE | 18 MINIMUM SINK BASE | OVERFLOW

Nantucket SINKS

VITREOUS CHINA VESSEL

All Dimensions are Nominal +/- .25"

NSV222

DIMENSIONS

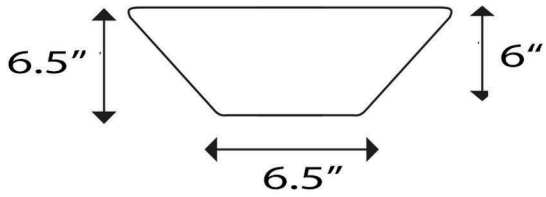

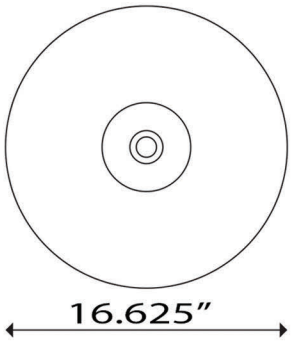

Drain Hole Diameter 1.75"
Standard Vanity Drain Required
No Overflow

NO OVERFLOW · 18 MINIMUM SINK BASE · MATERIAL LIFE RE-CYCLE · TOP MOUNT

FIRECLAY VESSEL

CANAL35-90

DIMENSIONS

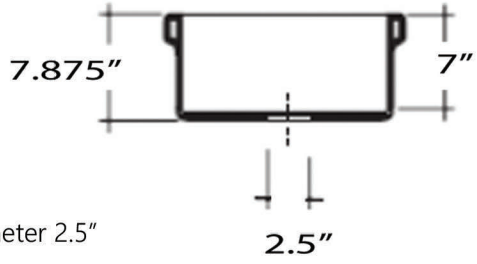

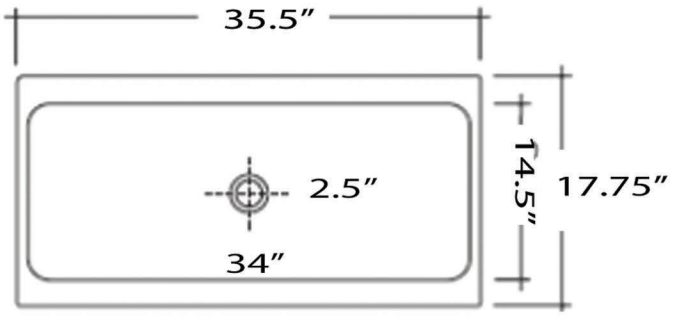

Drain Hole Diameter 2.5"
No Overflow

Nantucket SINKS

STAIN GUARD · SOUND GUARD RUBBER PADDING · BACTERIA RESISTANT · NO OVERFLOW · MATERIAL LIFE RE-CYCLE · TOP MOUNT

VITREOUS CHINA VESSEL

All Dimensions are Nominal +/- .25"

NSV305

DIMENSIONS

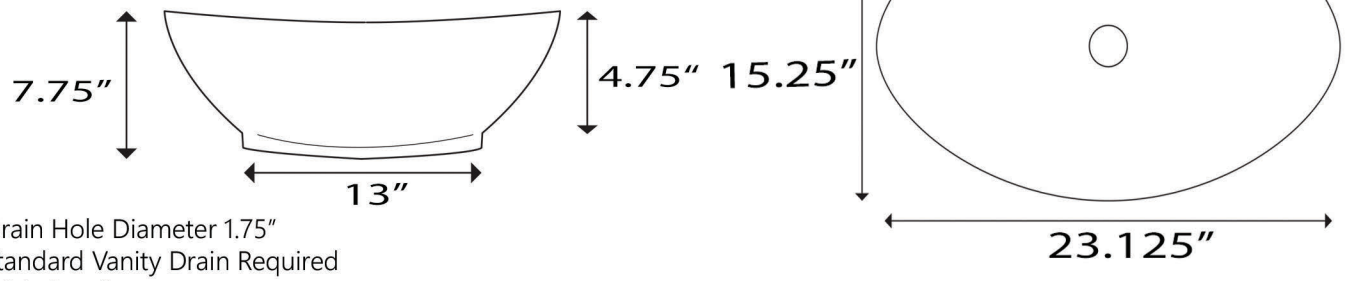

Drain Hole Diameter 1.75"
Standard Vanity Drain Required
With Overflow

TOP MOUNT | MATERIAL LIFE RE-CYCLE | 18 MINIMUM SINK BASE | OVERFLOW

NSV109

DIMENSIONS

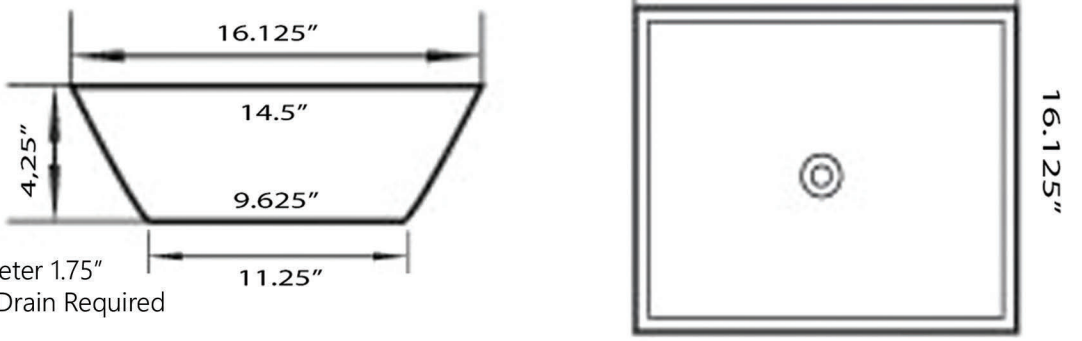

Drain Hole Diameter 1.75"
Standard Vanity Drain Required
No Overflow

TOP MOUNT | MATERIAL LIFE RE-CYCLE | 18 MINIMUM SINK BASE | NO OVERFLOW

Nantucket SINKS

Nantucket SINKS

PREMIUM BATH ACCESSORIES COLLECTION

Drains to fit your Vitreous China needs.

	NS-UDORB Oil Rubbed Bronze Finish (Pop-Up) Umbrella Drain *Designed for sinks with no overflow*	Fits 1.5" sink drain hole 2.5"W x 8.5"H *Fits the following sinks:* *NSV105A, NS107A, NSV109 & NSV222*
	NS-UDBN-OF Brushed Nickel Finish (Pop-Up) Umbrella Drain *Designed for sinks with overflow*	Fits 1.5" sink drain hole 2.5"W x 8.5"H *Fits the following sinks:* *NSV213, NSV218, NSV305, UM-13X10, UM-15X12, UM-16X11, UM-17X14-K, UM-18X12*
	NS-UDC Chrome Finish (Pop-Up) Umbrella Drain *Designed for sinks with no overflow*	Fits 1.5" sink drain hole 2.5"W x 8.5"H *Fits the following sinks:* *NSV105A, NS107A, NSV109 & NSV222*
	NS-UDC-OF Chrome Finish (Pop-Up) Umbrella Drain *Designed for sinks with overflow*	Fits 1.5" sink drain hole 2.5"W x 8.5"H *Fits the following sinks:* *NSV213, NSV218, NSV305, UM-13X10, UM-15X12, UM-16X11, UM-17X14-K, UM-18X12*